General Specifications

Model TDLS8000
Tunable Diode Laser Spectrometer

GS 11Y01D01-01EN

■ Overview

Yokogawa's new TDLS™8000 houses all of the industry's leading features in one robust device. The platform design is for in situ measurements which negate the need for sample extraction and conditioning.

The non-contacting sensor allows for a variety of process types including corrosive, abrasive and condensing.

The first generation platform has been proven in many others for the measurements of O_2, CO, CH_4, NH_3, H_2O and many more NIR absorbing gases.

This second generation platform has improved reliability and ease of installation and maintenance while still meeting or exceeding designed application demands.

TDLS8000 with YH8000 HMI Unit

■ Features

- **SIL2, TruePeak™ combined with smart laser technology**
  - Measurement integrates the area of the absorbance and gets a true, interference-free analysis under changing pressure, temperature and background
  - Laser module is replaceable on site without any calibration or adjustment
  - Internal reference cell in the laser module ensures peak locking during trace measurement
  - Laser and Detector modules are sealed to protect them from dirty purge gas
  - On board diagnostics and low TCO(*1) (no moving parts, high MTTF(*2) for components)
  - IEC61508 SIL designed & approved, SIL 2 capability for single analyzer use, SIL 3 capability for dual analyzer use
- **Intuitive touchscreen HMI**
  - Large HMI provides easy operation and control of up to 4 analyzers at the same time·A standard mini display at both sides enables easy optical alignment
- **HART and Modbus TCP communications standard**
- **8-stage auto-gain adapts to difficult applications**
  - Auto-gain enables wide signal ranges against dynamic variation of transmission.
- **Fully field repairable with 50 days of data and spectra storage**
- **Compact design for one-man installation without sacrificing ruggedness**
  - IECEx, ATEX, FM(US, Canada), KOSHA, NEPSI, EAC, Japan hazardous area approvals based on Nonincendive/Type n or Explosionproof/flame proof.
  - Purge gas is no need for explosion protection.
- **In-situ or extractive analysis and fast response (2-5 seconds, 1 second (optional))**
- **Process pressures up to 1 MPa abs. and process temperatures up to 1,500ºC (Note)**

  Note: Maximum process temperatures and pressures will vary by application
  *1: Total Cost of Ownership
  *2: Mean Time To Failure
- **10 language display options**
  YH8000 offers easy touch screen operation and simple menu structure in 10 languages. Menus of display, execution and setting are displayed in a selected language.

Typical gases measured include:

- Oxygen in process and combustion applications. Process temperatures can be as high as 1,500ºC, and process pressures can be as high as 1 MPa abs. Measurement span is typically between 1% and 25% oxygen.
- Carbon monoxide in process and combustion applications. Process temperatures can be as high as 1,500ºC. Two versions are available, high sensitivity with ppm detection limits, and standard sensitivity for higher ppm and percent level CO measurement

Other applications and gas measurements are possible with the TDLS8000. Please fill out the Application Data Sheet at the end of this document and send to Yokogawa.

TDLS, TruePeak are trademarks of Yokogawa Electric Corporation.
All other company and product names mentioned in this document are trademarks or registered trademarks of their respective companies.

YOKOGAWA

Yokogawa Electric Corporation
2-9-32, Nakacho, Musashino-shi, Tokyo, 180-8750 Japan
Tel.: 81-422-52-5617 Fax.: 81-422-52-6792

GS 11Y01D01-01EN
©Copyright Apr. 2015
11th Edition Feb. 27, 2018

■ System configuration

Standard System Configuration

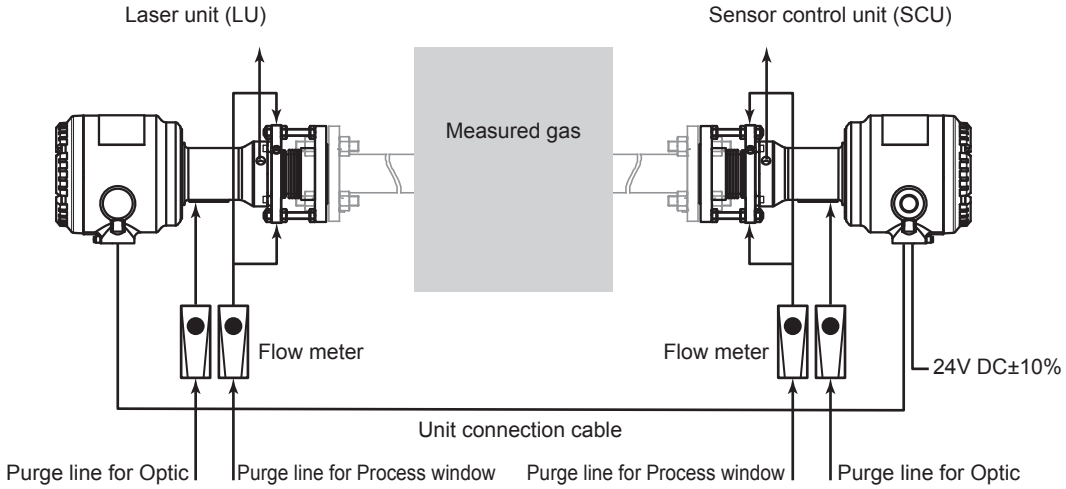

System Configuration with YH8000 HMI Unit and Validation gas line

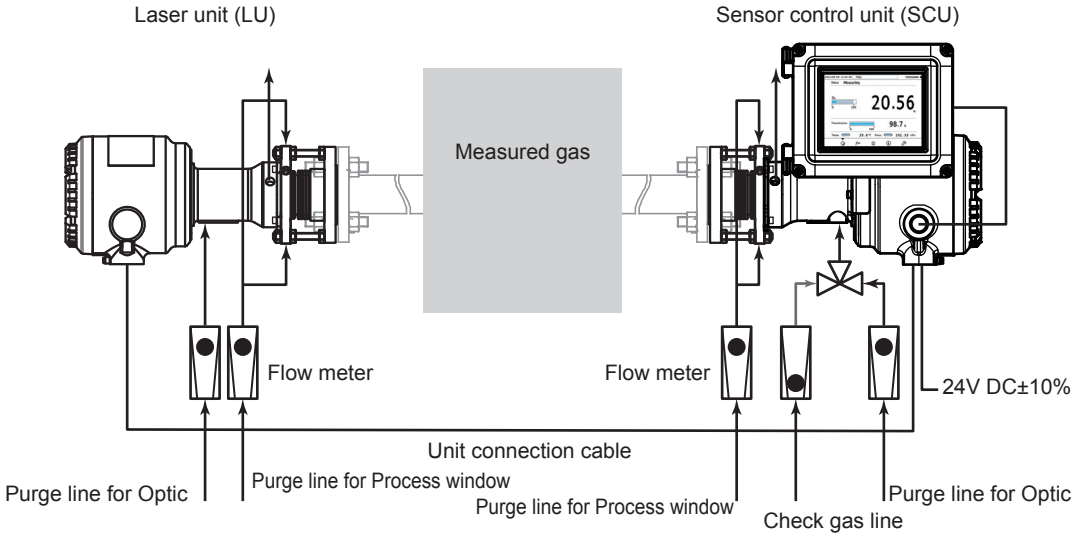

All Rights Reserved. Copyright © 2015, Yokogawa Electric Corporation

Multi Analyzer Configuration with Remote HMI

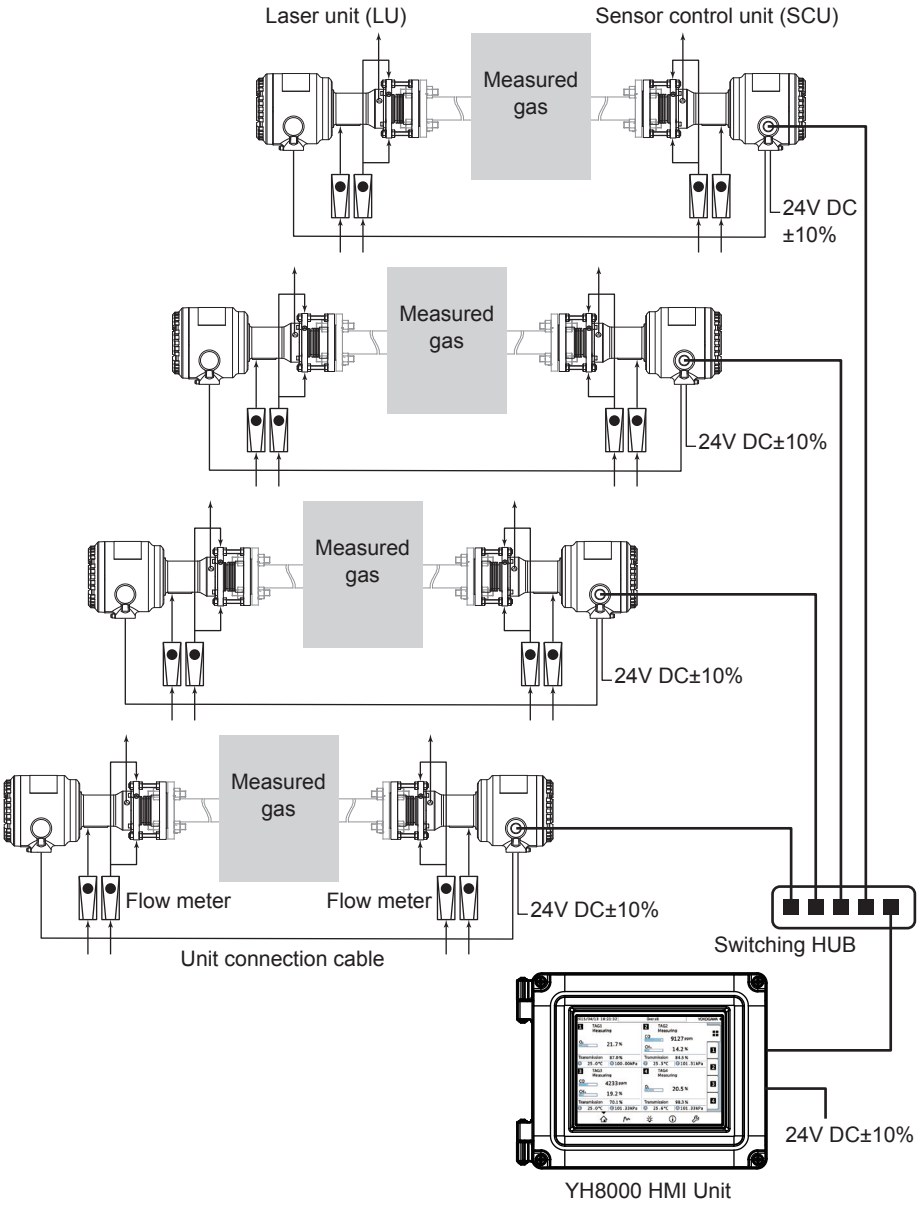

Note: If power supply is 100 to 240 V AC, purchase the Universal Power Supply, separately.
If four multi analyzer configuration with remote HMI is made, five universal power supply including YH8000 are needed.

All Rights Reserved. Copyright © 2015, Yokogawa Electric Corporation

■ STANDARD SPECIFICATIONS

TDLS8000 Tunable Diode Laser Spectrometer

Measurement object:
O_2, CO, CO or CH_4, CO_2, CO + CO_2, H_2O, NH_3, H_2S, HCl concentration in combustion exhaust gas and process gas
If other gas measurements are required, consult with Yokogawa

Measurement system:
Tunable diode laser spectroscopy
Light source; Near-infrared tunable diode laser

Measured components and ranges:

Measured component		Min. range	Max. range
O_2		0-1%	0-25%
CO (ppm)		0-200 ppm	0-10,000 ppm
CO or CH_4 (*2)	CO	0-200 ppm	0-10,000 ppm
	CH_4	0-5%	
NH_3		0-30 ppm	0-5,000 ppm
H_2O (ppm) in non HC (*1)		0-30 ppm	0-30,000 ppm
CO (%)		0-20%	0-50%
CO (%) + CO_2 (%)		0-30%	0-100%
H_2S		0-5%	0-100%
CO_2 (%) High Range		0-1%	0-5%
CO_2 (%) Extend. Range		0-30%	0-50%
H_2O (%)		0-10%	0-100%
HCl		0-50 ppm	0-5,000 ppm

*1: Non hydrocarbon background.
*2: Please consult with Yokogawa if CO or CH_4 ingredient coexists.

Please consult with Yokogawa if the measuring range for your sample gas is outside of the above ranges

Optical path length:
Optical distance between the laser unit and the sensor control unit
Standard; 0.5 to 6 m (Application dependent)
Max; 30 m (With optional Large Aperture Optics (LAO))
25 m (Zone 1/Div.1/Flameproof "d" with LAO)
Note: LAO unit can be selected only with analyzers for O_2, CO(ppm) and CO+CH_4.
If your optical path length is under 0.5 m or over 30 m, please consult with Yokogawa.

Safety, EMC, and RoHS conformity standards:
Safety conformity standards:
CE EN61010-1, EN61010-2-030
UL UL61010-1, UL 61010-2-030
CSA CAN/CSA-C22.2 No.61010-1, CAN/CSA-C22.2 No.61010-2-030
GB GB30439 Part 1
Installation altitude: 2000 m or less
Installation category:
I (Anticipated transient overvoltage 330V)
Measuring category: O (Other)
Pollution degree: 2, Indoor/Outdoor use
Note: Installation category, called overvoltage category, specifies impulse withstand voltage. Pollution degree indicates the degree of existence of solid, liquid, gas or other inclusions which may reduce dielectric strength.

EMC conformity standards:
CE EN55011 Class A Group 1
EN61326-1 Class A Table 2 (For use in industrial location), EN61326-2-3
RCM EN55011 Class A Group 1
KC KN11 Class A Group 1, KN61000-6-2 (Korea Electromagnetic Conformity)

RoHS conformity standards: EN50581

Information of the WEEE Directive
This product is purposely designed to be used in a large scale fixed installations only and, therefore, is out of scope of the WEEE Directive. The WEEE Directive does not apply.
The WEEE Directive is only valid in the EU.

Laser classification: CSA E60825-1-03(R2012), CE EN60825-1:2007, FDA 21CFR part 1040.10, GB7247.1-2012, Class 1 laser product

SIL Certification: The TDLS8000 expect digital output (2 points), digital input (2 points), valve control output (2 points), analog output (AO-2) and digital communications (HART, Modbus/TCP) are certified in compliance with the following standard.
IEC 61508:Functional safety of Electrical/electronic/programmable electronic related systems; SIL 2 capability for single analyzer use, SIL 3 capability for dual analyzer use.

Display: 128 x 64 dots LCD; On Sensor Control Unit
Status LEDs; 3 on Sensor Control Unit (Green: Power, Orange: DO, Red: Fault)
4 digit 7-segment LEDs: On Laser Unit

Display items:
LCD on Sensor Control Unit; Gas concentration, Transmission, Process gas temperature (AI), Process gas pressure (AI), System status, Alarm information, System information (Product serial no., Laser module serial no., Output signal, IP address, HART address, Optical path length, Analyzer internal temperature)
7-segment LEDs on Laser Unit; Transmission

Analog output: 2 points, 4 to 20 mA DC (Isolated from the power supply and ground, Max. load resistance 550 Ω)
Output types; Gas concentration, Transmission, Process gas temperature, Process gas pressure
Output range; 3.0 to 21.6 mA DC

Digital communications:
HART; On analog output signal 1 (AO-1)
Load resistance; 250 to 550 Ω (Include cable resistance)
Ethernet; RJ-45 connector in Sensor Control Unit
Protocol; Modbus/TCP
Communication speed; 100 Mbps

Digital output: 2 points, contact rating 24V DC, 1A
DO;
Function: Activate during Warning / Calibration / Validation / Warm up / Maintenance conditions
Contact Specification:Relay contact output (Isolated from the power supply and ground), C-contact (NC/NO/COM)
Fault;
Function: Activate during Fault condition or when the system power is off
Contact Specification:Relay contact output (Isolated from the power supply and ground), A-contact (NC/COM)

Valve control output: 2 points
Function; Activate calibration or validation solenoid valves for zero, span or validation gas.

All Rights Reserved. Copyright © 2015, Yokogawa Electric Corporation

Output signal; 24V DC, 500 mA Max. per terminal
Alarm:
Warning; Gas concentration low, Gas concentration high, Transmission low, Process pressure low, Process pressure high, Process temperature low, Process temperature high, Validation required, Validation failure, Zero calibration error, Span calibration error, Non process alarm, External alarm, Detector signal high, Absorption too high
Fault; Laser module temperature low, Laser module temperature high, Laser temperature low, Laser temperature high, Peak center out of range, Reference peak height low, Transmission lost, Reference transmission low, Reference peak height high, Laser unit failure, Laser module error, File access error, E2PROM access error
Digital input: 2 points
Function; External Alarm/Calibration start/ Validation start/Stream switch (Valve control)
Contact specification; Zero voltage contact input (Isolated from the power supply and ground)
Input signal; Open signal: 100 kΩ or more, Close signal: 200 Ω or less
Analog input: 2 points
Signal type; 4 to 20 mA DC (Isolated from the power supply and Ground), with selectable powered/unpowered function
Input signal range; 2.4 to 21.6 mA DC
Input types; Process gas temperature, Process gas pressure
Transmitter power supply; 15 V DC or higher (at 20 mA DC)
26 V DC or less (at 0 mA DC)
Note: This voltage is generated between the AI terminals of TDLS8000. When calculating the minimum operating voltage for transmitters, consider to allow margins for voltage drop in external wiring.
Self-diagnostics:
Laser Unit temperature, Sensor Control Unit temperature, Laser temperature, Detector signal level, Memory read/write function, Peak locking condition
Calibration:
Calibration method; Zero/Span calibration
Calibration mode; Manual, Auto (Time initiate, Remote initiate (DI/Modbus)), Semi-Auto (YH8000/HART)
Validation:
Validation method; Up to 2 points
Validation mode; Manual, Auto (Time initiated, Remote initiate (DI/Modbus)), Semi-Auto (YH8000/HART)
Note: Validation check is not available when Large Aperture Optics "-LA" of the Optic Accessory is specified or $H_2$0 ppm measurement "-H1" of the Gas Parameter is specified. As well, when gas concentration is unstable, please consult Yokogawa.
Power supply: 24V DC +/-10%
If your power supply is 100 to 240 V AC, Universal Power Supply, M1276WW (sold separately), is required
Power consumption:
Max. 20W; TDLS8000 only
Max. 60W; TDLS8000 with YH8000 and 2 solenoid valves

Protection degree: IP66, Type 4X
Material: Case; Aluminum alloy
Wetted materials:
316 SS, BK-7 glass, Teflon encapsulated FKM (O-ring for alignment flange), Silicone (O-ring for LAO)
Paint color: Mint green (RAL 190 30 15 or equivalent)
Weight:
Sensor Control Unit; Approx. 8 kg
Laser Unit; Approx. 8 kg
Large Aperture Optics; Approx. 14 kg
ANSI Class 150-2-RF (Eq.) Alignment Flange; Approx. 5 kg/pc
ANSI Class 150-3-RF (Eq.) Alignment Flange; Approx. 7 kg/pc
ANSI Class 150-4-RF (Eq.) Alignment Flange; Approx. 9 kg/pc
DIN PN16-DN50-A (Eq.) Alignment Flange; Approx. 5 kg/pc
DIN PN16-DN80-A (Eq.) Alignment Flange; Approx. 6 kg/pc
JIS 10K-50-FF (Eq.) Alignment Flange; Approx. 5 kg/pc
JIS 10K-80-FF (Eq.) Alignment Flange; Approx. 6 kg/pc
Flow Cell Alignment Flange; Approx. 5 kg/pc
Cable gland for Japan Ex "-J1"; (/JA1) Approx. 320 g/pc, (/JB3, /JB4) Approx. 450 g/pc
Cable gland for Japan Ex "-J2"; (/JC1, /JD1) Approx. 150 g/pc, (/JE3, /JE4) Approx. 200 g/pc
Process gas condition:
Process gas temperature; Max. 1,500ºC, Application dependent
Process gas pressure; Max.1 MPa abs., Min. 90 kPa abs., Application dependent
Max. 15 kPa G with LAO unit
Note: When using TDLS8000 as CE marking compliance product, it has following limitation.
General purpose model (-G1, -G2):
The upper limit of the measurement gas pressure is 50kPa in gauge pressure.
ATEX model (-S1, -S2):
The upper limit of the measurement gas pressure is 500kPa abs. The unstable gas defined by following cannot be measured.
An unstable gas in this context is a gas liable to transform itself spontaneously, producing a sudden pressure increase.
Such transformation as an example can result from a relatively small variation of an operating parameter (e.g. pressure, temperature, presence of catalyzing material) in a confined volume.
This includes gases that are classified as chemically unstable gases according to CLP Regulation (EC) No 1272/2008 as amended.
Typical examples of unstable gases: acetylene (UN 1001), methyl acetylene (UN 1060), vinylfluoride (UN 1860), ozone and dinitrogen oxide (UN 1067).
For further examples, see Table 35.1 of the UN Manual of Tests and Criteria.
Dust in process gas; 20 g/m^3 or less (Dust loading levels are dependent upon the application, OPL and other installation factors)
Warm-up time: 5 min.
Installation condition:
Ambient operating temperature; -20 to 55ºC
Storage temperature; -30 to 70ºC

All Rights Reserved. Copyright © 2015, Yokogawa Electric Corporation

Humidity; 0 to 95%RH at 40ºC (Non-condensing)
Mounting flange type; ASME B16.5, DIN, JIS
Cable entries;
Sensor Control Unit: 1/2NPT or M20x1.5mm,one hole
3/4NPT or M25x1.5mm, three holes
Laser Unit: 3/4 NPT or M25x1.5mm, one hole
Purge gas connections;
1/4NPT or Rc1/4
If other gas connections are required, please consult with Yokogawa.
Purge gas; Theoretically, instrument air could be used as a purge gas for all of the below applications except for oxygen or H_2O measurement. Choosing between using nitrogen or instrument air or purge gas will ultimately depend upon further application details and the desired precision of the measurement. All gasses should be clean and dry.
Recommended purge gasses:
O_2 analyzer: N_2 (99.99% or greater, application dependent)
H_2O ppm analyzer: N_2 (99.99% or greater with < 20 ppm H_2O for feed to the optional dryer package)
CO, CO or CH_4, CO_2, CO + CO_2, NH_3, H_2S, HCl analyzer: N_2 (99.99% or greater, application dependent) or Instrument air
Purge gas flow rates;
Optic: 2 to 20L/min (Application dependent)
2 to 20L/min and 50 to 70mL/min (Zone 1/Div.1/Flameproof “d”)
* Not more than 10kPa at the inlet for Zone 1/Div.1/Flameproof “d” and Zone 2/Div.2/Type of protection “n”
Process window: 5 to 30L/min (Application dependent)

Hazardous area classifications:

Division 1, Zone 1: Explosionproof
TDLS8000-D1 (FM Approval for US)
Division system:
Type of protection:
Explosionproof for Class I, Division 1, Groups A, B, C, D, T5
Dust-Ignitionproof for Class II/III, Division 1, Groups E, F, G, T5
Enclosure rating: Type4X
Applicable standards:
FM Class 3600: 2011, FM Class 3615: 2006, FM Class 3616: 2011, FM Class 3810: 2005, NEMA 250: 2003
Zone system:
Type of protection:
Class I, Zone 1, AEx db IIC T5
Zone 21, AEx tb IIIC T100ºC
Enclosure rating: IP66
Applicable standards:
ANSI/ISA 60079-0-2013
ANSI/UL 60079-1:2015
ANSI/ISA 60079-31-2015
ANSI/IEC 60529-2004 (R2011)
TDLS8000-C1 (FM Approval for Canada)
Type of protection:
Ex db IIC T5 Gb
Class II/III, Division 1, Groups E, F, G, T5
Ex tb IIIC T100 ºC, Db
Enclosure rating: IP66, Type4X
Applicable standards:
CAN/CSA-C22.2 NO. 0-10 (R2015)
CAN/CSA-C22.2 NO. 0.4-04 (R2013)
C22.2 NO. 0.5-1982 (R2012)
C22.2 NO.25-1966 (R2014)
C22.2 NO.94.2-07 (R2012)
CAN/CSA-C22.2 NO. 60079-0:15
CAN/CSA-C22.2 NO. 60079-1:16
CAN/CSA-C22.2 NO. 60079-31:15
CAN/CSA-C22.2 NO. 60529-05 (R2015)
CAN/CSA-C22.2 NO. 61010-1-12
CAN/CSA-C22.2 NO. 61010-2-030-12
ANSI/ISA 12.27.01-2011
TDLS8000-S1 (ATEX)
Type of protection:
II 2(1) G Ex db [op is T6 Ga] IIC T5 Gb
II 2 D Ex tb IIIC T100 ºC Db
Enclosure rating:
IP66 (In Accordance with EN 60529)
Applicable standards:
EN 60079-0:2012+A11:2013,
EN 60079-1:2014, EN 60079-28:2015,
EN 60079-31:2014,
TDLS8000-E1 (IECEx)
Type of protection:
Ex db [op is T6 Ga] IIC T5 Gb
Ex tb IIIC T100ºC Db
Enclosure rating:
IP66 (In Accordance with IEC 60529)
Applicable standards:
IEC 60079-0:2011, IEC 60079-1:2014,
IEC 60079-28:2015, IEC 60079-31:2013
TDLS8000-J1 (Japan Ex)
Type of protection: Ex d IIC T5 Gb
Applicable standards:
JNIOSH-TR-46-1:2015
JNIOSH-TR-46-2:2015
TDLS8000-Q1, -R1 (EAC)
Type of protection:
1Ex d [op is T6 Ga] IIC T5 Gb X
Ex tb IIIC T100 ºC Db X
Enclosure rating:
IP66 (In accordance with GOST 14254-96)
Applicable standards:
GOST R IEC 60079-0-2011
GOST IEC 60079-1-2011
GOST 31610.28-2012
GOST IEC 60079-31-2013

Division 2, Zone 2: Nonincendive/Type n
TDLS8000-D2 (FM Approval for US)
Division system:
Type of protection:
Nonincendive for Class I, Division 2, Groups A, B, C, D, T5
Dust-Ignitionproof for Class II/III, Division 1, Groups E, F, G, T5
Enclosure rating: Type 4X
Applicable standards:
FM Class 3600: 2011, FM Class 3611: 2004, FM Class 3616: 2011, FM Class 3810: 2005 NEMA 250: 2003
Zone system:
Type of protection:
Class I, Zone 2, AEx nA nC IIC T5
Zone 21, AEx tb IIIC T100ºC
Enclosure Rating: IP66

All Rights Reserved. Copyright © 2015, Yokogawa Electric Corporation

Applicable standards:
ANSI/ISA-60079-0-2013, ANSI/ISA-60079-15-2012, ANSI/ISA-60079-31-2015, ANSI/IEC 60529-2004 (R2011)

TDLS8000-C2 (FM Approval for Canada)
Type of protection: Ex nA nC IIC T5
Class II/III, Division 1, Groups E, F, G
Enclosure rating: IP66, Type 4X
Applicable standards:
CAN/CSA-C22.2 No.0-10 (R2015), CAN/CSA-C22.2 No.25-1966 (R2014), CAN/CSA-C22.2 No.94.1-07 (R2012), CAN/CSA-C22.2 No.94.2-07 (R2012), CAN/CSA-C22.2 No.60079-0:11, CAN/CSA-C22.2 No.60079-15:12, CAN/CSA-C22.2 No.61010-1-12, CAN/CSA-C22.2 No.61010-2-030-12, CAN/CSA-C22.2 No.60529-05 (R2010) ANSI/ISA-12.27.01-2011

TDLS8000-S2 (ATEX)
Type of protection:
II 3(1) G Ex nA nC [op is T6 Ga] IIC T5 Gc
II 2 D Ex tb IIIC T100 ºC Db
Enclosure rating:
IP66 (In accordance with EN 60529)
Applicable standards:
EN 60079-0: 2012+A11: 2013, EN 60079-15: 2010, EN 60079-28: 2007, EN 60079-28: 2015, EN 60079-31: 2014

TDLS8000-E2 (IECEx)
Type of protection:
Ex nA nC [op is T6 Ga] IIC T5 Gc
Ex tb IIIC T100ºC Db
Enclosure rating:
IP66 (In accordance with IEC 60529)
Applicable standards:
IEC 60079-0: 2011, IEC 60079-15: 2010, IEC 60079-28: 2015, IEC 60079-31: 2013

TDLS8000-K2 (KOSHA)
Type of protection: Ex nA nC IIC T5
Ex tD A21 T100 ºC
Enclosure rating:
IP66 (In accordance with IEC 60529)
Applicable standards:
Notice of Ministry of Labor No. 2013-54
Harmonized with IEC 60079-0: 2011, IEC 60079-15: 2010, IEC 60079-28: 2015, IEC 60079-31: 2013

TDLS8000-N2 (NEPSI)
Type of protection:
Ex nA nC [op is T6 Ga] IIC T5 Gc
Ex tD A21 IP66 T100ºC
Enclosure rating:
IP66 (In accordance with GB 4208)
Applicable standards:
GB 3836.1-2010, GB 3836.8-2014, GB 12476.1-2013, GB 12476.5-2013, IEC 60079-28:2015

TDLS8000-Q2, -R2 (EAC)
Type of protection:
2Ex nA nC [op is T6 Ga] IIC T5 Gc X
Ex tb IIIC T100 ºC Db X
Enclosure rating:
IP66 (In accordance with GOST 14254-96)
Applicable standards:
GOST R IEC 60079-0-2011
GOST R IEC 60079-15-2010
GOST 31610.28-2012
GOST IEC 60079-31-2013

TDLS8000-J2 (Japan Ex)
Type of protection: Ex nA nC IIC T5 Gc
Ex tb IIIC T100 ºC Db
Applicable standards:
JNIOSH-TR-46-1:2015
JNIOSH-TR-46-8:2015
JNIOSH-TR-46-9:2015
Enclosure rating:
IP66 (In accordance with IEC 60529)

PERFORMANCE

Repeatability / Linearity:

Measured gas		Repeatability	Linearity
O_2		+/- 1% reading or +/- 0.01 $\%O_2$, whichever is greater	+/- 1% F.S.
CO (ppm)		+/- 2% reading or +/- 1 ppm CO, whichever is greater	+/- 1% F.S.
CO or CH_4	CO	+/- 2% reading or +/- 1 ppm CO, whichever is greater	+/- 2% F.S.
	CH_4	+/- 4% reading or +/- 0.02% CH_4, whichever is greater	+/- 4% F.S.
NH_3		+/- 2% reading or +/- 1 ppm NH_3, whichever is greater	+/- 2% F.S.
H_2O (ppm) in non HC		+/- 2% reading or +/- 0.1 ppm H_2O, whichever is greater	+/- 1% F.S.
CO (%)		+/- 1% reading or +/- 0.01% CO, whichever is greater	+/- 1% F.S.
CO (%) + CO_2 (%)	CO	+/- 1% reading or +/- 0.1% CO, whichever is greater	+/- 1% F.S.
	CO_2	+/- 1% reading or +/- 0.1% CO_2, whichever is greater	+/- 1% F.S.
H_2S		+/- 1% reading or +/- 0.005% H_2S, whichever is greater	+/- 1% F.S.
CO_2 (%) High Range		+/- 1% reading or +/- 0.005% CO_2, whichever is greater	+/- 1% F.S.
CO_2 (%) Extend. Range		+/- 1% reading or +/- 0.02% CO_2, whichever is greater	+/- 1% F.S.
H_2O (%)		+/- 1% reading or +/- 0.004% H_2O, whichever is greater	+/- 1% F.S.
HCl		+/- 1% reading or +/- 2.5 ppm HCl, whichever is greater	+/- 2% F.S.

Measurement conditions: Gas temperature; 25 ºC, Gas pressure; 0.1 MPa, Optical path length; 1 m

Data Update Cycle:
Standard; Approx. 2 seconds (Response time may increase for non-standard applications)
If less than 2 seconds response is required, please consult with Yokogawa

Zero Drift: Typically <0.1% of the minimum range over 24 months

Influences on the Measurement - Application dependent

A. Temperature: The temperature of the measured gas should be taken into account by the analyzer so that the reading can be corrected on a real time basis. The effect is specific to each different measurement gas.
   a. If the gas temperature is constant at the desired measurement condition, then a fixed gas temperature may be programmed into the analyzer. This fixed value can be used in real time by the analyzer to provide a temperature-compensated reading.

All Rights Reserved. Copyright © 2015, Yokogawa Electric Corporation

b. If the gas temperature is relatively equal to the ambient temperature, then an integral sensor value may be utilized by the analyzer. This active ambient value is used real time by the analyzer to provide a temperature compensated reading.
c. If the gas temperature is variable, then an external sensor value may be utilized by the analyzer. This active input value can be used in real time by the analyzer to provide a temperature compensated reading.

B. Pressure: The pressure of the measured gas must be taken into account by the analyzer so that the reading can be corrected on a real time basis. The effect is specific to each different measurement gas.
a. If the gas pressure is constant at the desired measurement condition, then a fixed gas pressure may be programmed to the analyzer. This fixed value can be used in real time by the analyzer to provide a pressure compensated reading.
b. If the gas pressure is variable, then an external sensor value may be utilized by the analyzer. This active input value can be used in real time by the analyzer to provide a pressure compensated reading.

● YH8000 HMI Unit

The YH8000 is an HMI designed specifically for the TDLS8000. The YH8000 features an easy-to-use touchscreen 7.5 inch color LCD which can be used to display maintenance information, display alarm statuses and records, and set all parameters of the TDLS8000.

The YH8000 can be installed directly on the TDLS8000 or installed remotely.

An Ethernet connection is used to connect the YH8000 to up to four TDLS8000s simultaneously via a hub.

Display: Touchscreen 7.5 inch TFT color LCD panel, 640 x 480 (VGA)
Communication: Ethernet; RJ-45 connector
Communication speed; 100 Mbps
Case: Aluminum alloy
Paint color: Mint green (RAL 190 30 15 or equivalent)
Protection degree of enclosure: IP65, Type 4X
Window: Polycarbonate
Weight: Approx. 4 kg
Cable gland for Japan Ex; (/JA1, /JA2) Approx. 320 g/pc
Mounting: Analyzer mount (Front, left-side, right-side) with tilt function, Pipe mount, or Panel mount (Stainless steel)
Cable Entries: 1/2NPT or M20x1.5 mm, two holes
Installation conditions:
Ambient operating temperature; -20 to 55ºC
Storage temperature: -30 to 70ºC
Humidity: 10 to 90%RH at 40ºC (Non-condensing)
Power Supply: 24V DC +/-10%
Power consumption: Max.12 W

Safety, EMC, and RoHS conformity standards:
Safety conformitystandards:
CE EN61010-1
UL UL61010-1
CSA CAN/CSA-C22.2 No.61010-1
GB GB30439 Part 1

Installation Altitude: 2000 m or less
Installation category: I
(Anticipated transient overvoltage 330 V)
Pollution degree: 2, Indoor/Outdoor use
EMC conformity standards:
CE EN55011 Class A Group 1
EN61326-1 Class A Table 2 (For use in industrial location)
RCM EN55011 Class A Group 1
KC KN11 Class A Group 1, KN61000-6-2 (Korea Electromagnetic Conformity)
RoHS conformity standards: EN50581
Information of the WEEE Directive
This product is purposely designed to be used in a large scale fixed installations only and, therefore, is out of scope of the WEEE Directive.
The WEEE Directive does not apply.
The WEEE Directive is only valid in the EU.

Hazardous area classifications:

Division 2, Zone2: Nonincendive/Type n

YH8000-D2 (FM Approval for US)
Division system
Type of protection: Nonincendive for Class I, Division 2, Groups A, B, C, D, T5
Enclosure rating: Type 4X
Applicable standards: FM Class 3600: 2011, FM Class 3611: 2004, FM Class 3810: 2005, NEMA 250: 2003
Zone system
Type of protection: Class I, Zone 2, AEx nA ic IIC T5
Enclosure rating: IP65
Applicable standards: ANSI/ISA-60079-0-2013, ANSI/ISA-60079-11-2014, ANSI/ISA-60079-15-2012, ANSI/IEC 60529-2004 (R2011)

YH8000-C2 (FM Approval for Canada)
Type of protection: Ex nA nL IIC T5
Enclosure rating: IP65, Type 4X
Applicable standards: CAN/CSA-C22.2 No. 0-10 (R2015), CAN/CSA-C22.2 No. 94.1-07 (R2012), CAN/CSA-C22.2 No. 94.2-07 (R2012), CAN/CSA-C22.2 No.60079-0:11, CAN/CSA-C22.2 No.60079-15:12, CAN/CSA-C22.2 No.61010-1-12, CAN/CSA No. 60529-5 (2010)

YH8000-S2 (ATEX)
Type of protection: II 3 G Ex nA ic IIC T5 Gc
Enclosure rating: IP65 (In accordance with EN 60529)
Applicable standards: EN 60079-0: 2012+A11: 2013, EN 60079-11: 2012, EN 60079-15: 2010

YH8000-E2 (IECEx)
Type of protection: Ex nA ic IIC T5 Gc
Enclosure rating: IP65 (In accordance with IEC 60529)
Applicable standards: IEC 60079-0: 2011, IEC 60079-11: 2011, IEC 60079-15: 2010

YH8000-J2 (Japan Ex)
Type of protection: Ex nA ic IIC T5 Gc
Enclosure rating: IP54 (In accordance with IEC 60529) *1

*1: IP54 that is minimum requirement of Ex standards is confirmed at the conformance assessment of Japan Ex. YH8000 can be used in the environment required IP65.

All Rights Reserved. Copyright © 2015, Yokogawa Electric Corporation

Applicable standards: JNIOSH-TR-46-1:2015
JNIOSH-TR-46-6:2015
JNIOSH-TR-46-8:2015

YH8000-K2 (KOSHA)
Type of protection: Ex nA nL IIC T5
Enclosure rating: IP65 (In accordance with IEC 60529)
Applicable standards: Notice of Ministry of LaborNo. 2013-54 Harmonized with IEC60079-0: 2011, IEC 60079-11: 2011, IEC 60079-15:2010

YH8000-N2 (NEPSI)
Type of protection: Ex nA ic IIC T5 Gc
Enclosure rating: IP65 (In accordance with GB 4208)
Applicable standards: GB 3836.1-2010, GB 3836.4-2010, GB 3836.8-2014

YH8000-R2 (EAC)
Type of protection: 2Ex nA ic IIC T5 Gc X
Enclosure rating: IP65 (In accordance with GOST 14254-96)
Applicable standards: GOST R IEC 60079-0-2011 GOST R IEC 60079-15-2010

● IF8000 Isolation Flanges

A process isolation flange protects the TDLS8000 from the process gas pressure and the heat, dust, and corrosive elements of the process gas. A process isolation flange must be installed in the following situations.

- When the process gas pressure exceeds 500 kPa
- When the process temperature is high and the temperature of the process window area exceeds 55ºC even when process window purge is performed.
- When the process dust level is high and the adherence of dust or intrusion of corrosive elements cannot be prevented even when process window purge is performed.

The IF8000 isolation flanges can be used for additional protection in in-situ or bypass installations.

Note: Must use in conjunction with alignment flanges

Process connections: (see below table)
Heatresistance temperature: 200ºC max
Measured gas pressure: Max. 1 MPa abs.
Wetted materials: Sapphire, 316 SS, Monel 400, Kalrez (O-ring)

Weight;

Process connection	Analyzer connection	Weight (Approx.)	
		316SS	Monel 400
ANSI Class 150-2-RF Flange	ANSI Class 150-2-RF Flange	5 kg/pc	6 kg/pc
ANSI Class 300-2-RF Flange		7 kg/pc	7 kg/pc
ANSI Class 150-3-RF Flange		8 kg/pc	9 kg/pc
ANSI Class 300-3-RF Flange		11 kg/pc	12 kg/pc
ANSI Class 150-4-RF Flange		12 kg/pc	14 kg/pc
DIN PN16-DN50 Flange	DIN PN16-DN50 Flange	7 kg/pc	7 kg/pc
DIN PN16-DN80 Flange		10 kg/pc	11 kg/pc
JIS 10K-50-FF Flange		7 kg/pc	7 kg/pc
JIS 10K-80-FF Flange		9 kg/pc	10 kg/pc

Note: When using TDLS8000 as CE marking compliance product, the upper limit of the measurement gas pressure is 50kPa in gauge pressure.

● YC8000 Flow Cell

Used for extracting sample streams at any location.

Note: Must use in conjunction with alignment flanges (“-FC”)

Gas temperature: 200ºC max
Gas pressure: Max. 1 MPa abs.
Wetted materials: Sapphire, 316 SS, Monel 400, Kalrez (O-ring)

Weight;

Material/Optical Path Length	1016 mm (40 inch)	1524 mm (60 inch)
Monel 400	Approx. 15 kg	Approx. 18 kg
316 SS	Approx. 14 kg	Approx. 17 kg

Note: When using TDLS8000 as CE marking compliance product, the upper limit of the measurement gas pressure in YC8000 is 50kPa in gauge pressure.

● Calibration Cell

Used for off-line calibrations and validations. Appropriate process windows are included on calibration cell.

Optical Path Length: 660 mm
Material: 316 SS

Part No.	Description	Weight
K9772XA	Calibration Cell with free-standing frame for O_2	Approx. 14 kg
K9772XB	Calibration Cell with free-standing frame for O_2 LAO	
K9772XC	Calibration Cell with free-standing frame for ppm H_2O in non- hydrocarbon	
K9772XD	Calibration Cell with free-standing frame for NH_3	
K9772XF	Calibration Cell with free-standing frame for ppm CO	
K9772XG	Calibration Cell with free-standing frame for ppm CO LAO	
K9772XH	Calibration Cell with free-standing frame for CO (%) + CO_2 (%), CO_2 (%) Extend. Range	
K9772XJ	Calibration Cell with free-standing frame for HCl	
K9772XL	Calibration Cell with free-standing frame for CO(%), CO_2 (%) High Range	
K9772XM	Calibration Cell with free-standing frame for H_2S	

Note: When using TDLS8000 as CE marking compliance product, the upper limit of gas pressure in calibration cell is 50kPa in gauge pressure.

All Rights Reserved. Copyright © 2015, Yokogawa Electric Corporation

- **Unit Connection Cable**

Use for interconnecting the Sensor Control Unit and the Laser Unit.

Construction: Double-shielded (Overall shield and Individual shields) 4-pair cable

Part No.	Cable length
K9775XA	5 m
K9775XB	10 m
K9775XC	20 m
K9775XD	30 m
K9775XE	40 m
K9775XF	50 m
K9775XG	60 m

Note: When cable length is not more than 25m, Belden 1475A may be used as Unit Connection Cable.

All Rights Reserved. Copyright © 2015, Yokogawa Electric Corporation

■ MODEL AND CODES

- **TDLS8000 Tunable Diode Laser Spectrometer**

Model	Suffix Code	Option Code	Description
TDLS8000	.....	.....	Tunable Diode Laser Spectrometer
Type	**-G1**	.....	General Purpose, cable entry/piping:NPT
	-G2	.....	General Purpose, cable entry:Metric thread, piping:Rc
	-GQ	.....	EAC with PA General Purpose, cable entry:Metric thread, piping:Rc
	-GR	.....	EAC General Purpose, cable entry:Metric thread, piping:Rc
	-D2	.....	FM (US) Class I Div 2, Zone2, cable entry/piping:NPT
	-C2	.....	FM (Canada) Class I Zone2, cable entry/piping:NPT
	-S2	.....	ATEX Type of protection “n”, cable entry:Metric thread, piping:Rc
	-E2	.....	IECEx Type of protection “n”, cable entry:Metric thread, piping:Rc
	-K2	.....	KOSHA Type of protection “n”, cable entry:Metric thread, piping:Rc
	-N2	.....	NEPSI Type of protection “n”, cable entry:Metric thread, piping:Rc
	-Q2	.....	EAC with PA Type of protection “n”, cable entry:Metric thread, piping:Rc
	-R2	.....	EAC Type of protection “n”, cable entry:Metric thread, piping:Rc
	-D1	.....	FM (US) Class I Div 1, Zone1, cable entry/piping:NPT (*1)
	-C1	.....	FM (Canada) Class I Zone1, cable entry/piping:NPT (*1)
	-S1	.....	ATEX Flameproof ”d”, cable entry:Metric thread, piping:Rc (*1)
	-E1	.....	IECEx Flameproof “d”, cable entry:Metric thread, piping:Rc (*1)
	-J1	.....	Japan Ex / Zone 1, cable entry:Metric thread, piping:Rc (*1) (*11)
	-J2	.....	Japan Ex / Zone 2, cable entry:Metric thread, piping:Rc (*11)
	-Q1	.....	EAC with PA Flameproof “d”, cable entry:Metric thread, piping:Rc (*1)
	-R1	.....	EAC Flameproof “d”, cable entry:Metric thread, piping:Rc (*1)
Gas Parameter	**-X1**	.....	O_2 < 600°C, 0-25% (*2)
	-X2	.....	O_2 < 1500°C, 0-25% Combustion
	-C1	.....	CO (%) 0-20%/0-50% <500°C
	-C2	.....	CO ppm 0-200ppm/0-10,000ppm <500°C (*3)
	-C3	.....	CO ppm <1500°C Combustion (*3)
	-C4	.....	CO ppm <1500°C or CH_4 0-5% Combustion (*3)
	-C5	.....	CO (%) + CO_2(%) 0-30%/0-100% <150°C
	-A1	.....	NH_3 up to 0-5,000ppm <450°C $DeNO_X$
	-S1	.....	H_2S 0-5%/0-100% <100°C (*2)
	-D1	.....	CO_2 High Range 0-1%/0-5% <100°C
	-D5	.....	CO_2 Extend. Range 0-30/0-50% <150°C
	-H1	.....	H_2O ppm non-Hydrocarbon Background (*1) (*4)
	-H4	.....	H_2O 0-10%/0-100% <500°C (*2)
	-L1	.....	HCl 0-50ppm/0-5,000ppm <500°C
Optics Accessory	**-NN**	.....	Without Alignment Flanges (*4)
	-LA	.....	Large Aperture Optics, ANSI CLASS150-4-RF (*5) (*6)
	-U2	.....	ANSI CLASS150-2-RF(Eq.) Alignment Flange, pipng: NPT
	-U3	.....	ANSI CLASS150-3-RF(Eq.) Alignment Flange, pipng: NPT
	-U4	.....	ANSI CLASS150-4-RF(Eq.) Alignment Flange, pipng: NPT
	-D5	.....	DIN PN16-DN50-D(Eq.) Alignment Flange, pipng: Rc
	-D8	.....	DIN PN16-DN80-D(Eq.) Alignment Flange, pipng: Rc
	-J5	.....	JIS 10K-50-FF(Eq.) Alignment Flange, pipng: Rc
	-J8	.....	JIS 10K-80-FF(Eq.) Alignment Flange, pipng: Rc
	-FC	.....	Flow Cell Alignment Flange (*6)
I/O Interface	**-A1**	.....	Analog with HART+Modbus Ethernet
SI Unit	**-J**	.....	Only SI Unit
	-N	.....	SI Unit or non SI Unit (*7)
—	**-N**	.....	Always -N
Option		**/D**	Diverging Beam without LAO (*8)
		/RX	Reference Cell for O_2 (*9)
		/RC	Reference Cell for CO (*10)
		/SCT	Stainless Steel Tag Plate
		/JA1	Cable gland for Japan Ex “-J1” (Cable O.D. 8-12mm, G1/2) 1pc, for local HMI
		/JB3	Cable gland for Japan Ex “-J1” (Cable O.D. 10-16mm, G3/4) 3 pcs
		/JB4	Cable gland for Japan Ex “-J1” (Cable O.D. 10-16mm, G3/4) 4 pcs
		/JC1	Cable gland for Japan Ex “-J2” (Cable O.D. 6-9.5mm, M20) 1pc, for local HMI
		/JD1	Cable gland for Japan Ex “-J2” (Cable O.D. 8.5-13.4mm, M20) 1pc, for local HMI
		/JE3	Cable gland for Japan Ex “-J2” (Cable O.D. 9.5-15.4mm, M25) 3 pcs
		/JE4	Cable gland for Japan Ex “-J2” (Cable O.D. 9.5-15.4mm, M25) 4 pcs

*1: Type “-D1”, “-C1”, “- S1”, “-E1”, “-J1”, “-Q1”, “-R1” cannot be selected with “-H1”.
*2: When the process gas pressure is out of 90 to 130 kPa (abs.), please contact with YOKOGAWA.
*3: When CO or CH_4 ingredient coexist, please contact with YOKOGAWA.
*4: When “-NN” is selected, Zone2/Div2/Type of protection “n”, FM (Canada) Zone1 is not available.

All Rights Reserved. Copyright © 2015, Yokogawa Electric Corporation

*5: For applications whose optical path length is 6 m or longer, select the “-LA”. A condensing lens unit (LAO unit) is added to the SCU side.
“-LA” can be selected when Oxygen or CO (-C2, -C3, -C4) analyzer is selected.
“-LA” can be selected with Zone 1/Div.1/Flameproof “d” when Gas Parameter “-X2”, “-C3”, “-C4” is selected.
*6: When FM (US) or FM (Canada) is specified, the connecting port for window purge is 1/4NPT.
When ATEX, IECEx, KOSHA, NEPSI, EAC or Japan Ex is specified, the connecting port for window purge is Rc1/4.
*7: Available only to an end user located outside of Japan.
*8: The Option “/D” can be selected when Large Aperture Optics “-LA” of the Optic Accessory is not specified and Oxygen or CO (-C2, -C3, -C4) analyzer is selected.
*9: The Option “/RX” can be used when Oxygen analyzer is selected. When both “-X2” of the Gas Parameter and “-LA” of the Optics Accessory are selected, “/RX”must be specified.
*10: The Option “/RC” can be used when CO analyzer is selected. When both “-C3” or “-C4”of the Gas Parameter is selected, “/RC” must be specified.
*11: For Japan Ex model (TDLS8000-J1, TDLS8000-J2), specified cable glands shall be attached to each cable entry for wiring. Select one cable gland out of two types: (/JB3 or /JB4 for “-J1”, /JE3 or /JE4 for “-J2”). If you need, specify (/JA1 for “-J1”, / JC1 or /JD1 for “-J2”) as well. For detailed information, refer to Japanese General Specifications.

● YH8000 HMI Unit

Model	Suffix Code	Option Code	Description
YH8000	.....	.....	HMI Unit
Type	**-G1**	.....	General Purpose, NPT thread for cable entry
	-G2	.....	General Purpose, Metric thread for cable entry
	-GR	.....	EAC General Purpose, Metric thread for cable entry
	-D2	.....	FM (US) Class I Div 2, Zone2, NPT thread for cable entry
	-C2	.....	FM (Canada) Class I Zone2, NPT thread for cable entry
	-S2	.....	ATEX Type of protection “n”, Metric thread for cable entry
	-E2	.....	IECEx Type of protection “n”, Metric thread for cable entry
	-J2	.....	Japan Ex / Zone 2, Metric thread for cable entry (*2)
	-K2	.....	KOSHA Type of protection “n”, Metric thread for cable entry
	-N2	.....	NEPSI Type of protection “n”, Metric thread for cable entry
	-R2	.....	EAC Type of protection “n”, Metric thread for cable entry
Language	**-E**	.....	English and 9 languages (*1)
—	**-N**	.....	Always -N
Option		**/M**	Mounting kit for TDLS8000 (*3)
		/P	Pipe mount
		/W	Wall mount
		/S	Sun Shield
		/C	Local HMI connection cable: 3m
		/SCT	Stainless Steel Tag Plate
		/JA1	Cable gland for Japan Ex (Cable O.D. 8-12mm, G1/2), 1 pc(*2)
		/JA2	Cable gland for Japan Ex (Cable O.D. 8-12mm, G1/2), 2 pc(*2)

*1: These languages are message languages on the display.
One analyzer has English and 9 languages.
All languages are as follows; English, German, French, Spanish, Portuguese, Russian, Hungarian, Korean, Chinese and Japanese.
*2: For Japan Ex/Zone 2 certified model (YH8000-J2), specified cable glands shall be attached to each cable entry for wiring. For detailed information, refer to Japanese General Specifications (GS 11Y01D01-01JA).
*3: /M cannot be selected with TDLS8000 Type “-D1”, “-C1”, “-S1”, “-E1”, “-J1”, “-Q1” “-R1”.

All Rights Reserved. Copyright © 2015, Yokogawa Electric Corporation

● IF8000 Isolation Flanges

Model	Suffix Code	Option Code	Description
IF8000	.....	.....	Isolation Flange for TDLS8000 (2pcs/unit) (*1)
Process Connection (*2)	**-21**	.....	ANSI CLASS150-2-RF(Eq.)
	-23	.....	ANSI CLASS300-2-RF(Eq.)
	-31	.....	ANSI CLASS150-3-RF(Eq.)
	-33	.....	ANSI CLASS300-3-RF(Eq.)
	-41	.....	ANSI CLASS150-4-RF(Eq.)
	-50	.....	DIN PN16-DN50-D(Eq.)
	-80	.....	DIN PN16-DN80-D(Eq.)
	-J5	.....	JIS 10K-50-FF(Eq.)
	-J8	.....	JIS 10K-80-FF(Eq.)
Analyzer Connection (*3)	**-21**	.....	ANSI CLASS150-2-RF(Eq.)
	-50	.....	DIN PN16-DN50-D(Eq.)
Material	**-MN**	.....	Monel 400
	-SS	.....	316/316L SS
Sapphire Window Type	**-12**	.....	Coated for O_2 (-X1, -X2)
	-13	.....	Coated for ppmH_2O non Hydrocarbon background (-H1)
	-14	.....	Coated for ppmNH_3 (-A1)
	-16	.....	Coated for ppmCO (-C2, -C3, -C4)
	-17	.....	Coated for %CO or %CO_2 (-C5, -D5)
	-18	.....	Coated for HCl (-L1)
	-20	.....	Coated for -C1, -D1, -H4, -S1
—	**-N**	.....	Always -N

*1: IF8000 is delivered with two sets (for LU and SCU).
*2: When ANSI flange of the Process Connection is selected, the “-21” of Analyzer Connection must be specified.
When DIN or JIS of the Process Connection is selected, the “-50” of Analyzer Connection must be specified.
*3: The Analyzer Connection must be selected according to the flange size of TDLS8000.

● YC8000 Flow Cell

Model	Suffix Code	Option Code	Description
YC8000	.....	.....	Flow Cell for TDLS8000
Flow Cell Type	**-EN**	.....	Enhanced
Optical Path Length	**-40**	.....	Forty Inches
	-60	.....	Sixty Inches
Material	**-MN**	.....	Monel 400
	-SS	.....	316/316L SS
Port Configuration	**-3**	.....	3 ports
Window Type	**-XX**	.....	Oxygen (-X1, -X2)
	-HH	.....	Moisture non Hydrocarbon background (-H1)
	-NH	.....	NH_3 (-A1)
	-CC	.....	ppmCO (-C2, -C3, -C4)
	-C2	.....	CO%+CO_2% (-C5, -D5)
	-HC	.....	HCl (-L1)
	-MC	.....	-C1, -D1, -H4, -S1
Inside Wall Treatment	**-NN**	.....	No treatment (cleaned)
	-EP	.....	Electro-polish
—	**-N**	.....	Always -N

All Rights Reserved. Copyright © 2015, Yokogawa Electric Corporation

■ EXTERNAL DIMENSIONS

For the external dimensions of Japan Ex model (TDLS8000-J1, TDLS8000-J2, YH8000-J2), see Japanese General Specifications (GS 11Y01D01-01JA).

TDLS8000 with Alignment Flange

- **LU**

Unit: mm

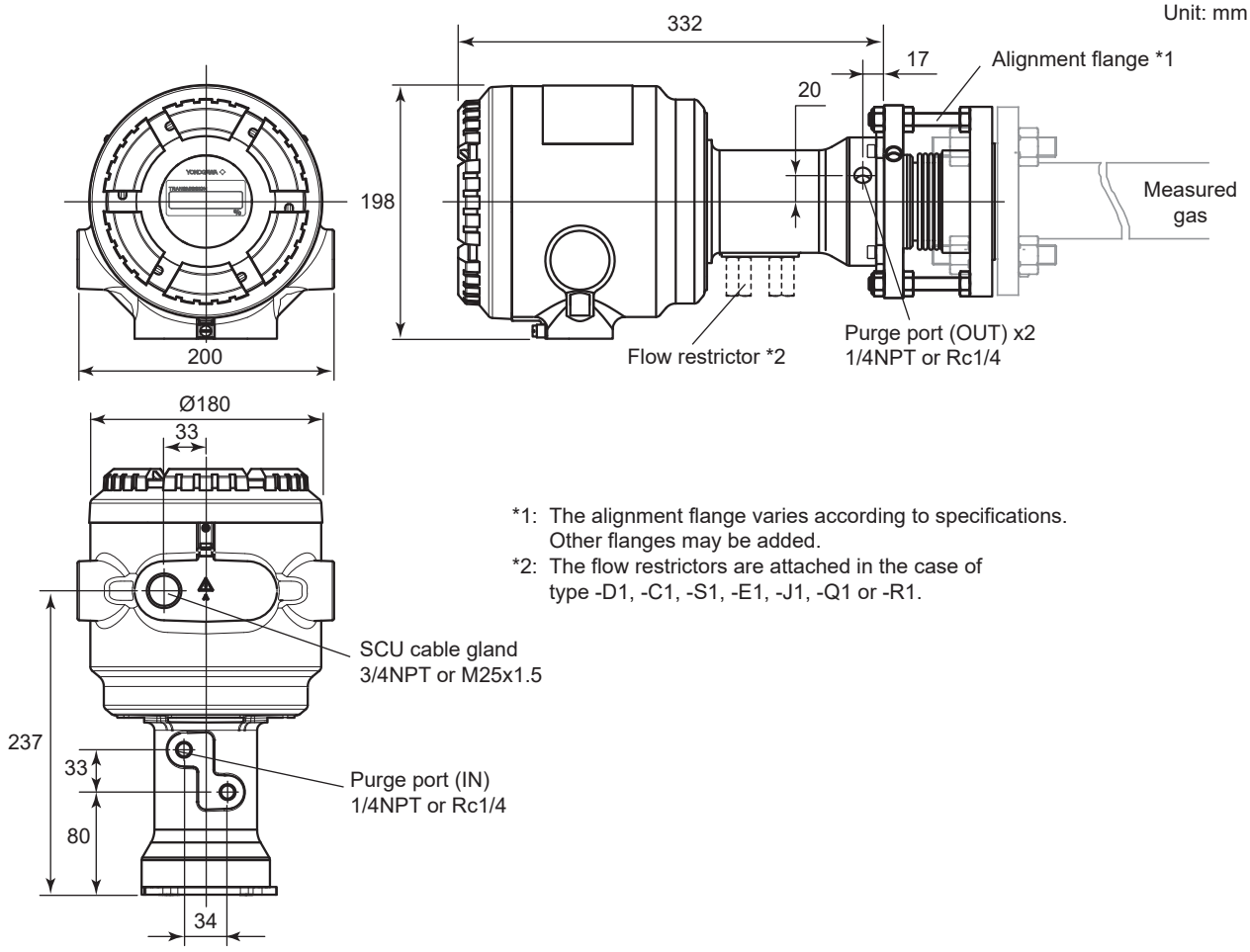

*1: The alignment flange varies according to specifications. Other flanges may be added.
*2: The flow restrictors are attached in the case of type -D1, -C1, -S1, -E1, -J1, -Q1 or -R1.

All Rights Reserved. Copyright © 2015, Yokogawa Electric Corporation

- **SCU**

Unit: mm

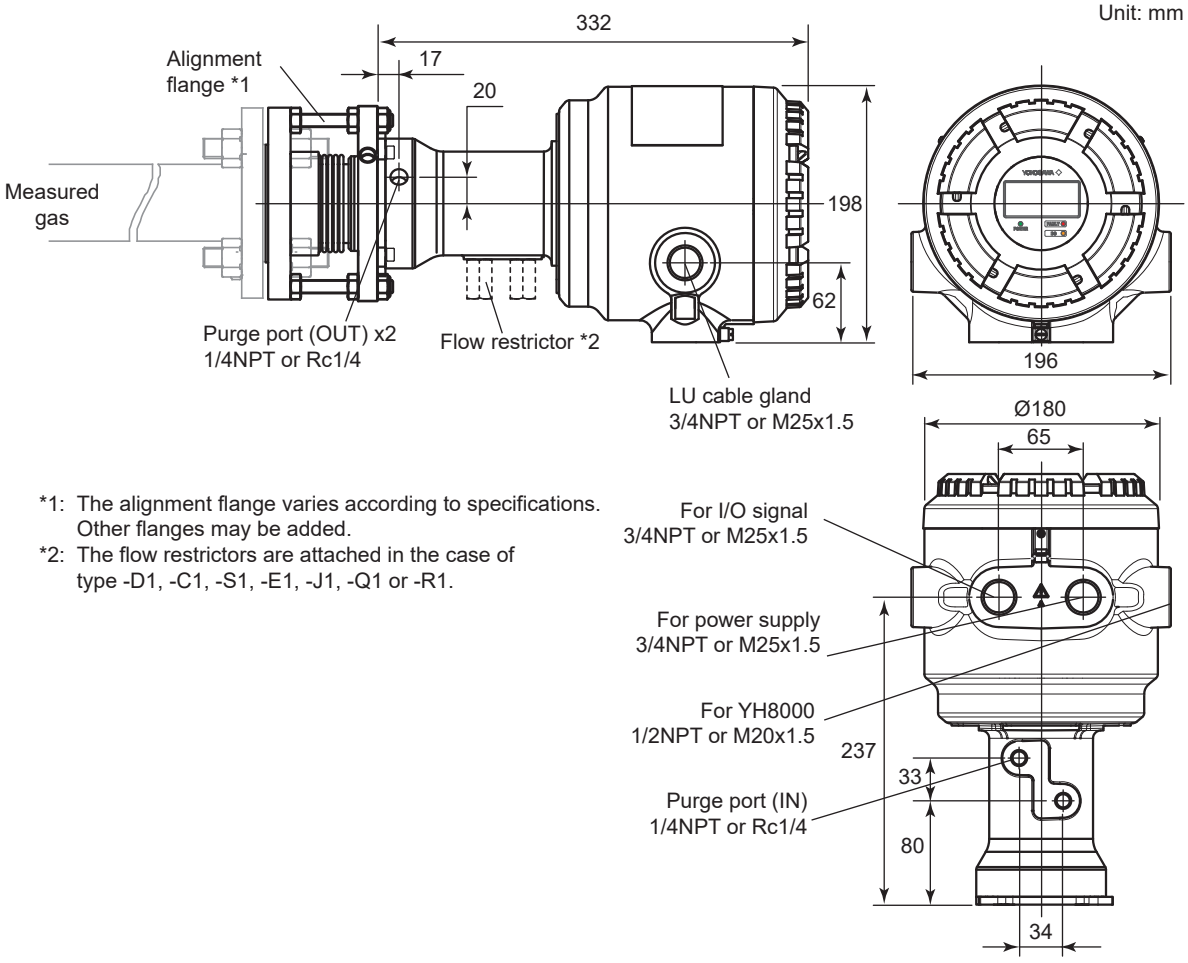

*1: The alignment flange varies according to specifications. Other flanges may be added.
*2: The flow restrictors are attached in the case of type -D1, -C1, -S1, -E1, -J1, -Q1 or -R1.

- **Maintenance space**

Unit: mm

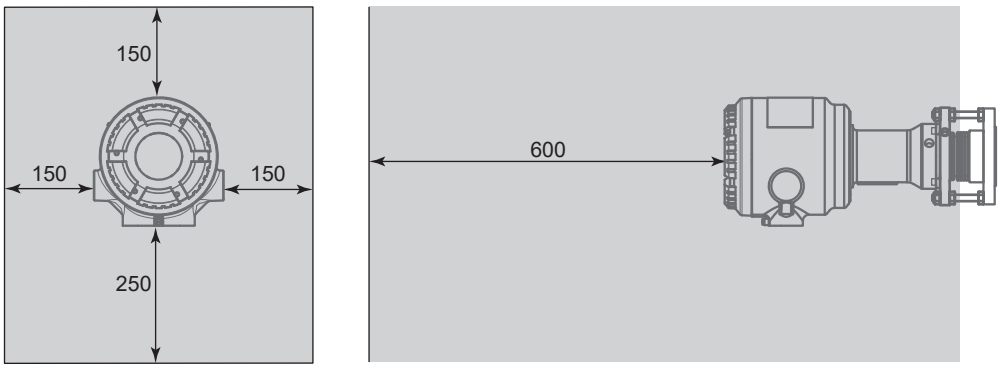

All Rights Reserved. Copyright © 2015, Yokogawa Electric Corporation

- **Alignment Flange**

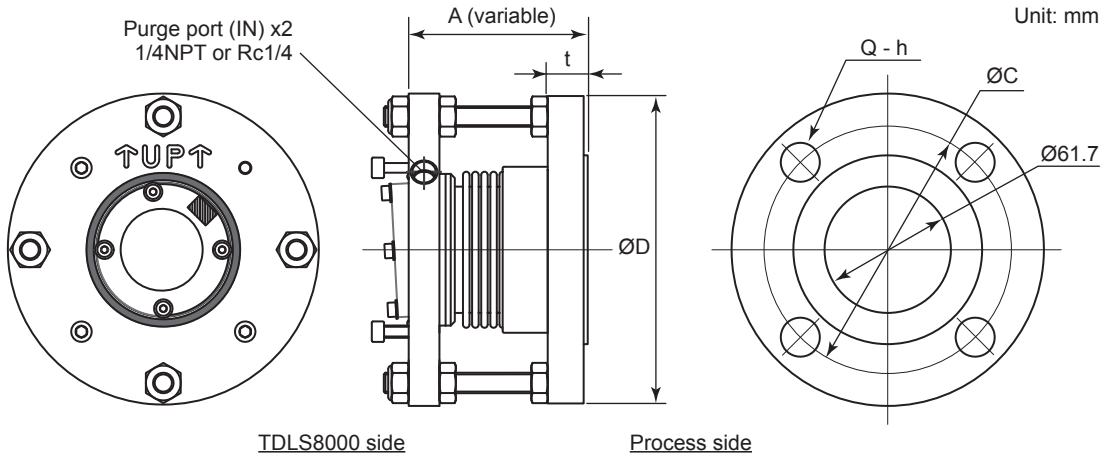

Optics Accessory code (flange)		Hole QTY Q	Hole h	Hole P.C.D C	Thickness t	Outside dia. D	Distance A	Purge port
-U2	ANSI CLASS150-2-RF(Eq.)	4	19	120.7	19.5	150	87	1/4NPT
-U3	ANSI CLASS150-3-RF(Eq.)	4	19	152.4	24.3	190	92	1/4NPT
-U4	ANSI CLASS150-4-RF(Eq.)	8	19	190.5	23.9	228.6	92	1/4NPT
-D5	DIN PN16-DN50-D(Eq.)	4	18	125	18	165	86	Rc1/4
-D8	DIN PN16-DN80-D(Eq.)	8	18	160	20	200	88	Rc1/4
-J5	JIS 10K-50-FF(Eq.)	4	19	120	16	155	84	Rc1/4
-J8	JIS 10K-80-FF(Eq.)	8	19	150	18	185	86	Rc1/4

- **LAO (Large Aperture Optics); Optics Accessory code "-LA"**

This accessory is only for SCU side. For LU side, the Alignment flange ANSI CLASS150-4-RF (Eq.) will be mounted. When piping is Rc1/4, a conversion adapter will be attached on the Alignment flange of the LU side.

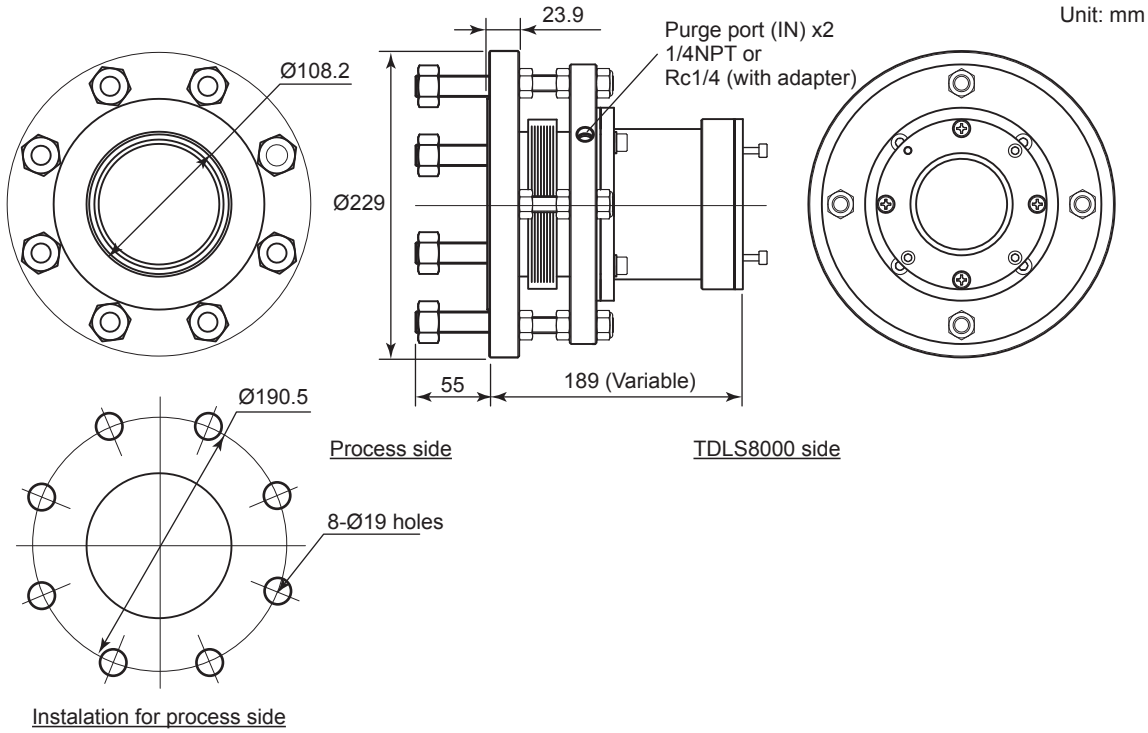

All Rights Reserved. Copyright © 2015, Yokogawa Electric Corporation

■ YH8000 HMI Unit

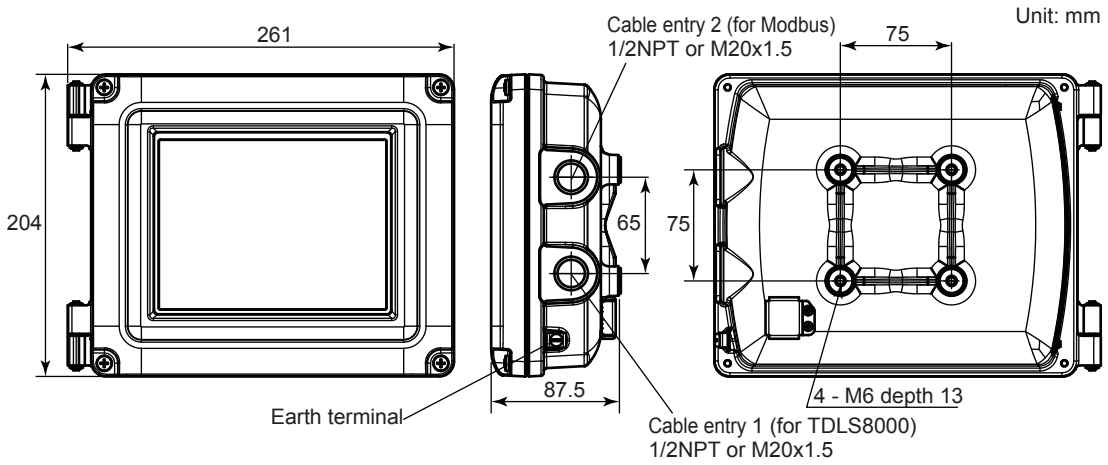

Mounting kit for TDLS8000 (Option code: /M)

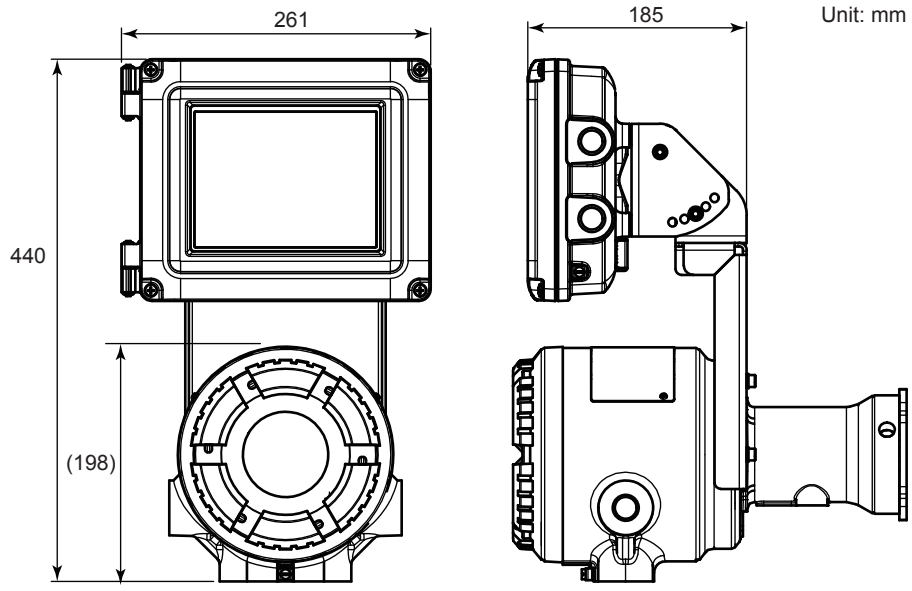

Front mounting

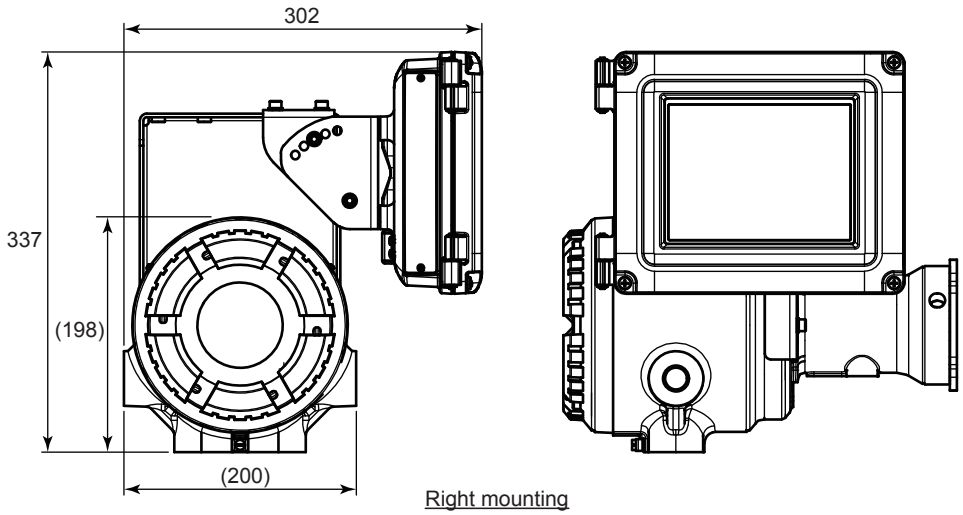

Right mounting

Available for left mounting

All Rights Reserved. Copyright © 2015, Yokogawa Electric Corporation

Pipe mount (Option code: /P)

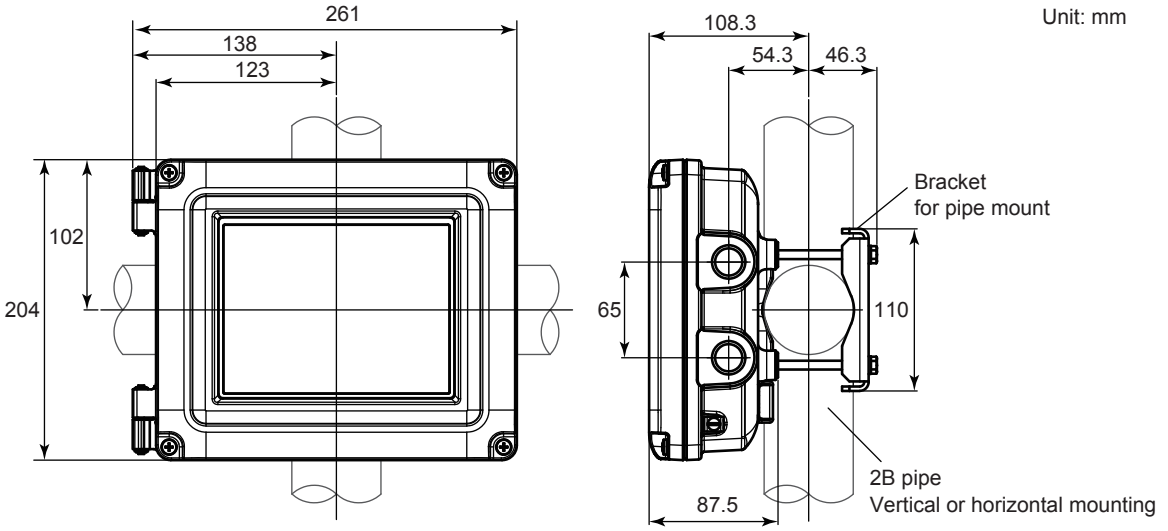

Sun Shield (Option code: /S)

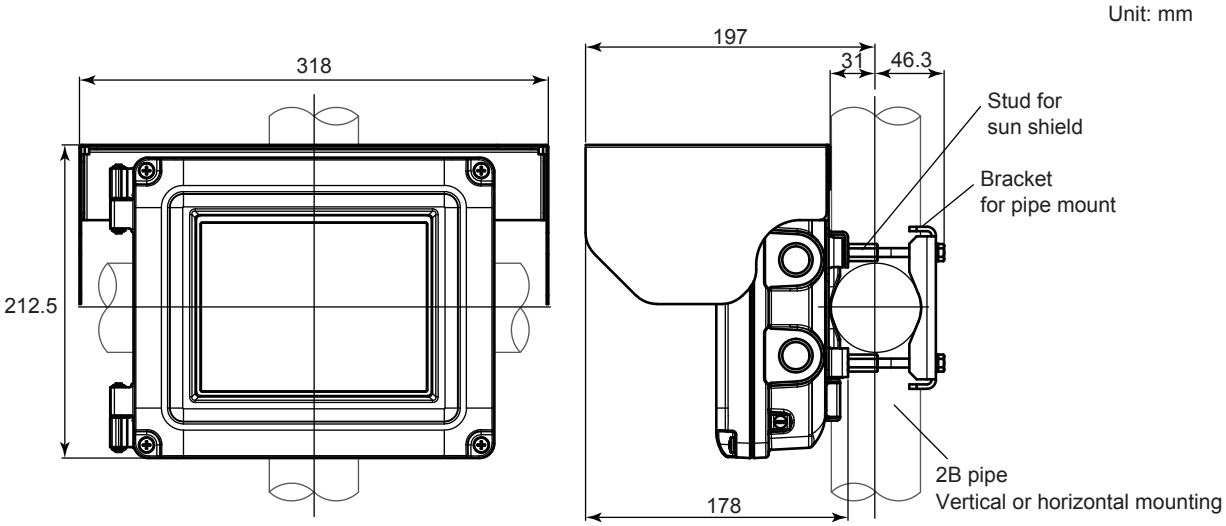

Wall mount (Option code: /W)

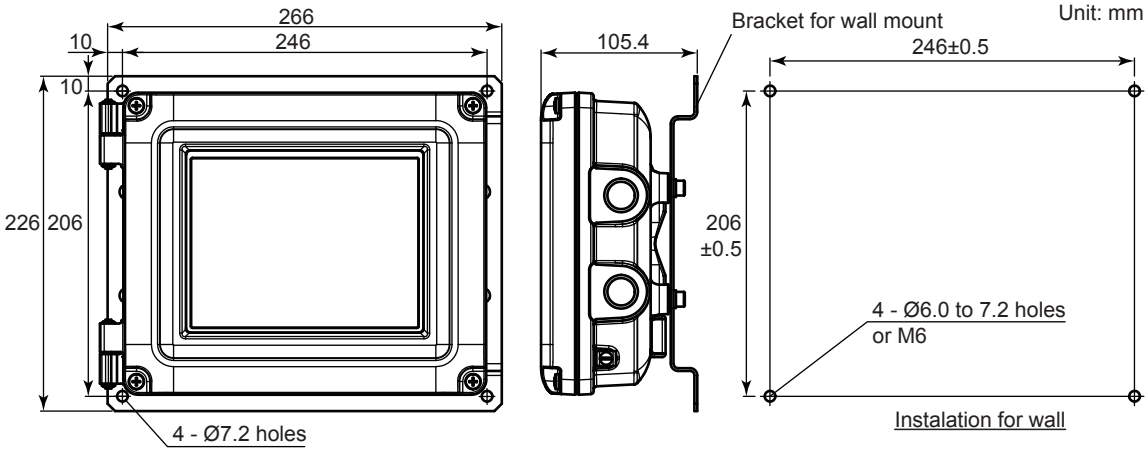

*: The wall construction for mounting has to be designed for 4 times the weight of the YH8000.
Bracket for wall mount can be placed in lengthwise

All Rights Reserved. Copyright © 2015, Yokogawa Electric Corporation

Sun Shield (Option code: /S)

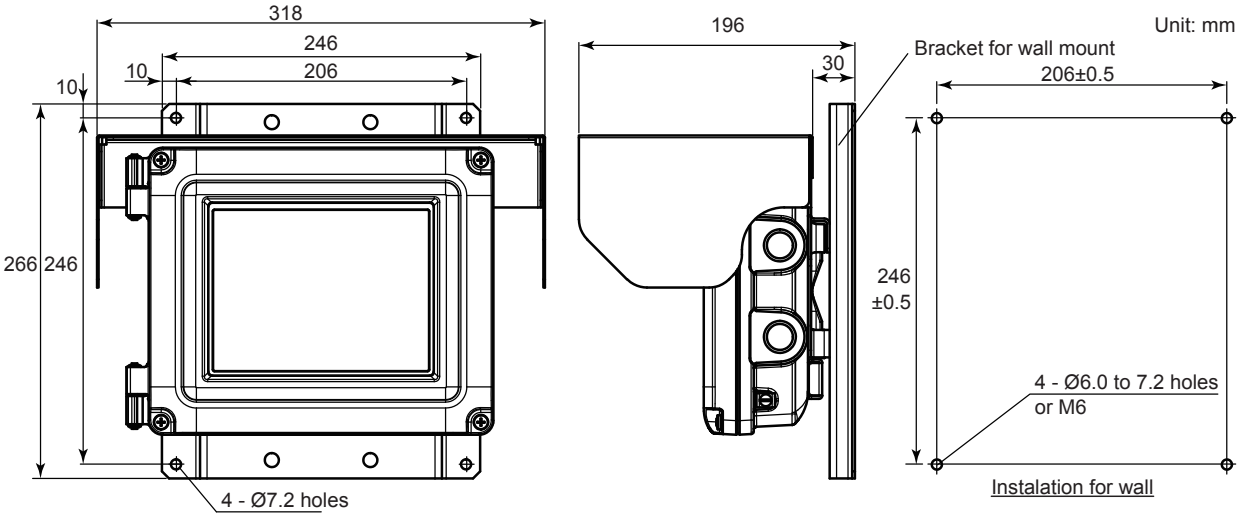

When the sun shield is mounted, the bracket for wall have to be placed in widthwise.

■ IF8000 Isolation Flanges

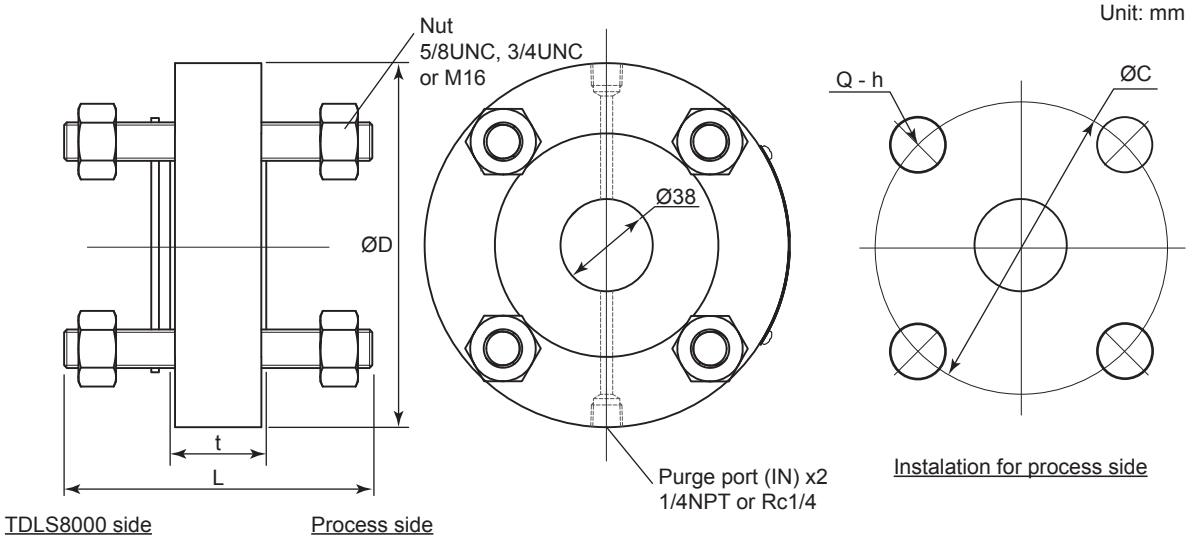

Process Connection code (flange)		Analyzer Connection code (flange)		Hole QTY Q	Hole h	Nut	Hole P.C.D C	Thickness t	Outside dia. D	Bolt length L	Purge port
-21	ANSI CLASS150-2-RF(Eq.)	-21	ANSI CLASS150-2-RF(Eq.)	4	19	5/8UNC	120.7	39.6	150	127	1/4NPT
-23	ANSI CLASS300-2-RF(Eq.)			8	19		127	39.6	165	137	
-31	ANSI CLASS150-3-RF(Eq.)			4	19		152.4	39.6	190	137	
-33	ANSI CLASS300-3-RF(Eq.)			8	22	3/4UNC	168.3	39.6	210	146	
-41	ANSI CLASS150-4-RF(Eq.)			8	19	5/8UNC	190.5	39.1	228.6	137	
-50	DIN PN16-DN50-D(Eq.)	-50	DIN PN16-DN50-D(Eq.)	4	18	M16	125	41.6	165	137	Rc1/4
-80	DIN PN16-DN80-D(Eq.)			8	18		160	41.6	200	137	
-J5	JIS 10K-50-FF(Eq.)			4	19		120	40.6	165	139	
-J8	JIS 10K-80-FF(Eq.)			8	19		150	40.6	185	139	

All Rights Reserved. Copyright © 2015, Yokogawa Electric Corporation

■ YC8000 Flow Cell

TDLS8000 have to be assigned the dedicated Alignment flange (Optic Accessory: -FC).
When piping is Rc1/4, a conversion adopter will be attached on the Alignment flange.

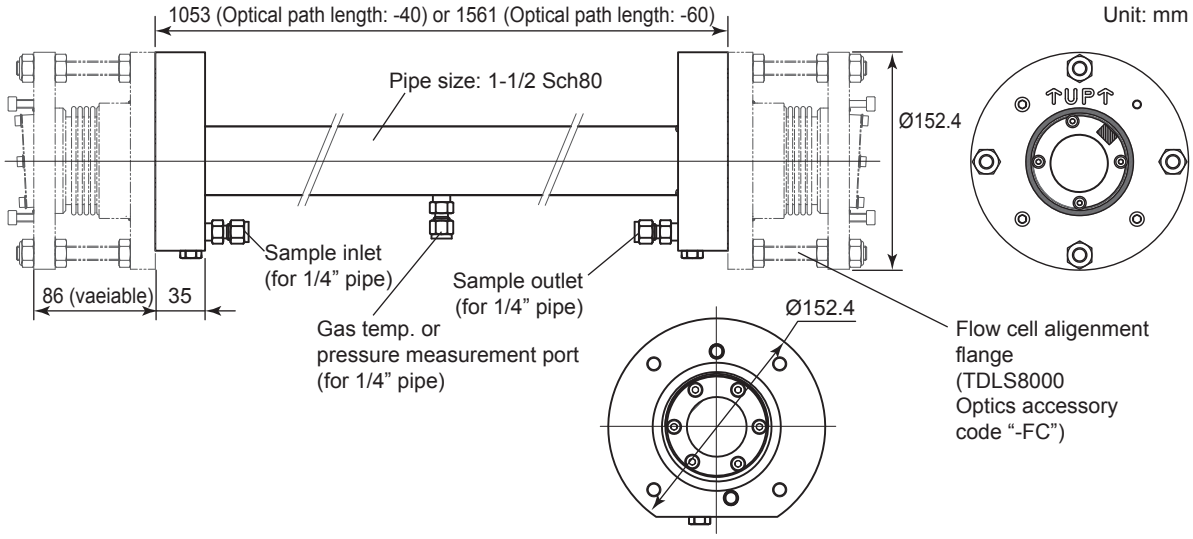

■ Calibration Cell

Part number: K9772XA, K9772XB, K9772XC, K9772XD, K9772XF, K9772XG, K9772XH, K9772XJ, K9772XL, K9772XM

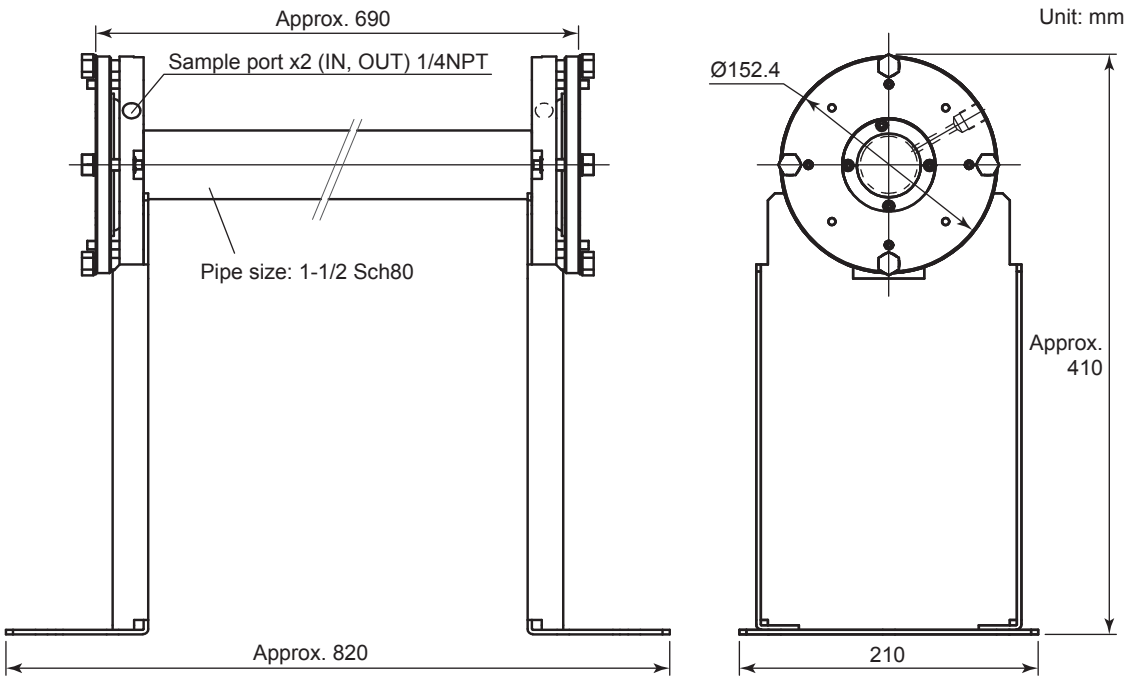

All Rights Reserved. Copyright © 2015, Yokogawa Electric Corporation

■ WIRING

Wiring Laser Unit and Sensor Control Unit

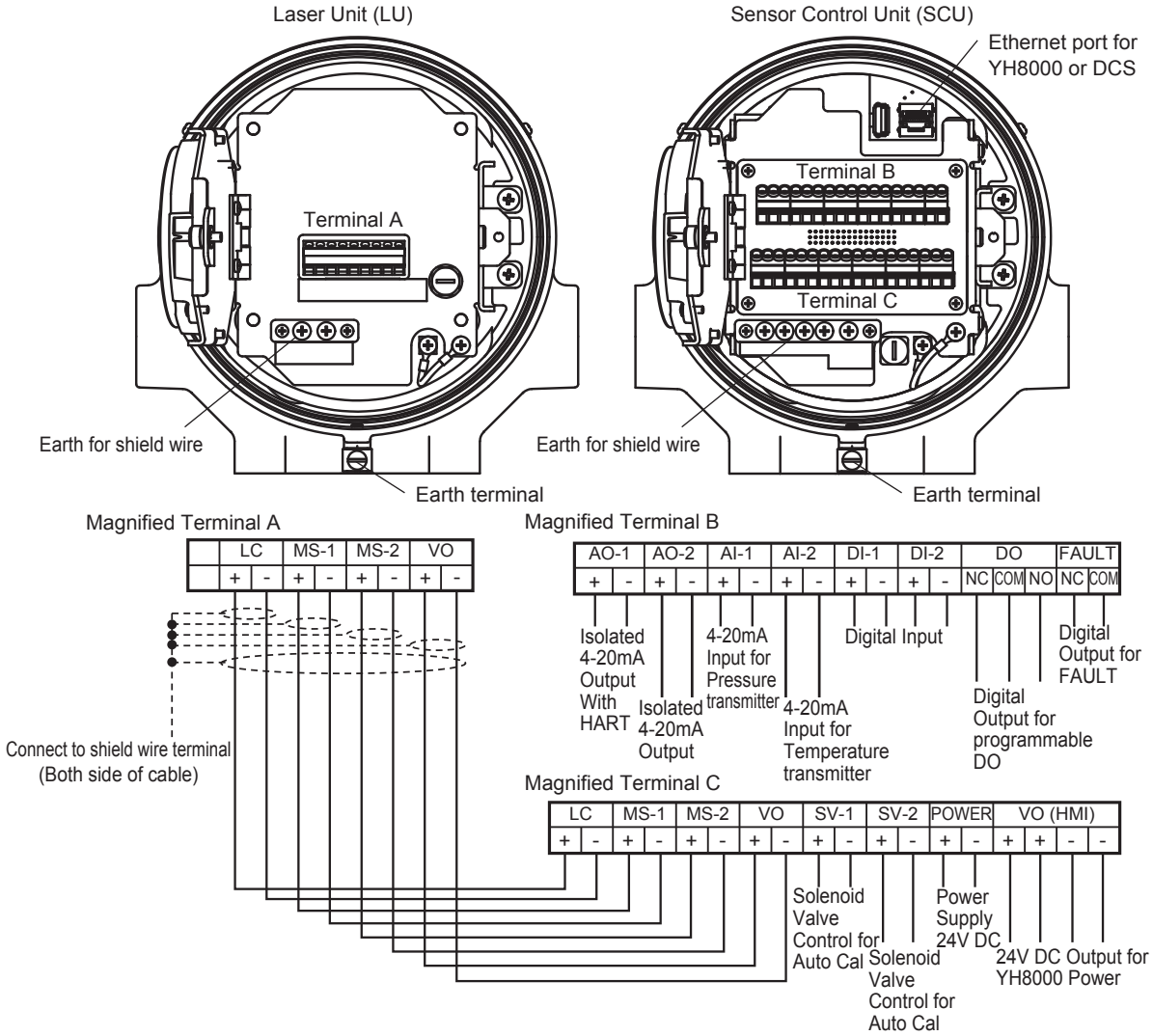

All Rights Reserved. Copyright © 2015, Yokogawa Electric Corporation

Wiring the YH8000 HMI UNIT

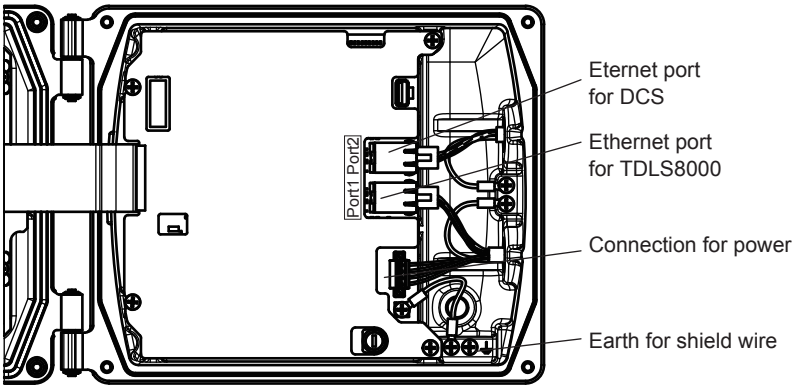

Local HMI configuration

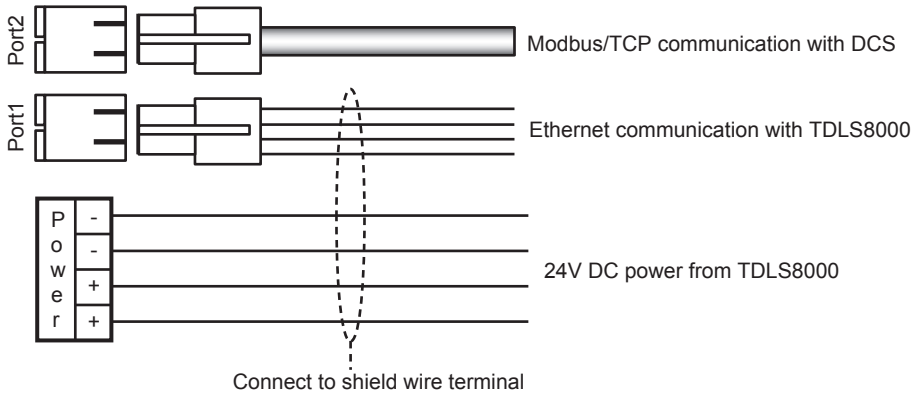

- Connection cable between TDLS8000 and YH8000 must be use special cable which can be specified option code “/C.”
- Maximum cable length between TDLS8000 and YH8000 is 3m.
- Maximum cable length between YH8000 and DCS is 100m.

Remote HMI configuration

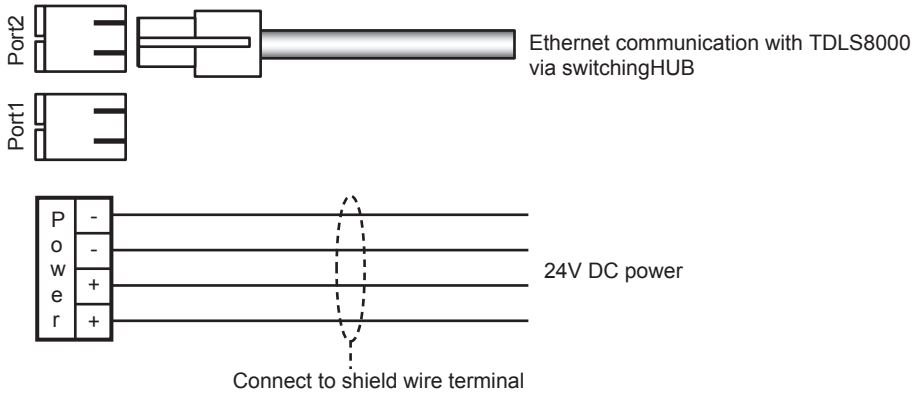

- Maximum cable length between YH8000 and Switching HUB is 100m.

All Rights Reserved. Copyright © 2015, Yokogawa Electric Corporation

TDLS8000 Tunable DiodeLase Gas Analyzer Inquiry Form

Thank you for your inquiry about our TDLS8000 Tunable Diode Laser Gas Analyzer. Please make inquiries by placing checkmarks in the appropriate boxes and filling in the blanks. (The items with check mark and descriptions previously filled on the underlines are fixed requirements.)

1. General Information

Company :_____
Address :_____
Contact Person :_____
Email :_____
Telephone :_____
Fax :_____
Requested delivery date (day/month/year):_____
Plant name :_____
Brief Description of application :_____

2. Installation Details (check one-see drawing)

☐ Cross Stack/Pipe. For measurement across the process.
Path length_____
Process Connection_____
☐ Bypass Leg. Measurement across bypass leg located at process measurement point.
Path length_____
Process Connection_____
☐ Extractive. Sample is extracted and transported (by others) to analyzer.

3. Analyzer Options:

☐ YH8000 HMI Unit ☐ IF8000 Isolation Flanges ☐ YC8000 Flow Cell
☐ Calibration Cell ☐ Unit Connection Cable
Cable length from Analyzer Unit to HMI Unit (specify units) :_____
Area Classification:_____
Ambient Temperature (Min-Max.) Specify units_____

4. Process Wetted Materials

Must Use_____
Must Not Use_____

5. Stream Composition (1 sheet per stream analyzed)

Component	Concentrations			Units	Measured	Range If Measured
Name	Min.	Typ.	Max.	ppm(v)/vol%	Yes/No	

All Rights Reserved. Copyright © 2015, Yokogawa Electric Corporation

6. Physical Properties

	Units	Min.	Typ.	Max.
Temperature				
Pressure				
Dew Point				
Water Vapor				
Flow				
Velocity				
Particulate Concentration				

Installation location: ☐ Indoor ☐ Outdoor

Ambient temperature: _____ to _____ ºC

7. General Application & Installation Notes/Comments:

All Rights Reserved. Copyright © 2015, Yokogawa Electric Corporation
Subject to change without notice.